Underwater signal processing using embededd filters

Ramya P
Dept of ECE, CIT
KR Puram,Bengaluru-560036
Karnataka,India
ramyapadiralu@gmail.com

Sri lakshmi JP
Dept of ECE, CIT
KR Puram,Bengaluru-560036
Karnataka,India
srilakshmi2921@gmail.com

Shreemurali A
Dept of ECE, CIT
KR Puram,Bengaluru-560036
Karnataka,India
Shreemurali13805@gmail.com

Ranjithkumar TV
Dept of ECE, CIT
KR Puram,Bengaluru-560036
Karnataka,India
ranjithkumartv432@gmail.com

***Abstract*—Underwater signal processing is crucial for various applications, including sonar systems, marine research, and underwater communication. However, challenges such as noise interference, multipath propagation, and signal attenuation significantly impact signal quality, necessitating the use of effective filtering techniques.This study focuses on designing and optimizing embedded filters specifically for underwater environments. These filters are developed to enhance performance while addressing constraints such as limited power availability, computational efficiency, and real-time processing demands in embedded systems.The research explores the implementation of digital filters, particularly Finite Impulse Response (FIR) and Infinite Impulse Response (IIR) filters, tailored for underwater acoustic signals. Techniques like windowing methods and frequency-domain analysis are applied to achieve key performance metrics, including low power consumption, improved signal-to-noise ratio (SNR), and adaptability to varying underwater conditions.To validate their effectiveness, the designed filters are deployed on embedded hardware platforms such as Digital Signal Processors (DSPs) and Field-Programmable Gate Arrays (FPGAs), ensuring efficient real-time signal processing. Their performance is assessed through simulations and real-world experiments, evaluating factors like computational efficiency, processing delay, and accuracy across different configurations.The results demonstrate that the proposed embedded filters significantly enhance the clarity and reliability of underwater signals, making them well-suited for diverse applications. This research highlights the integration of advanced signal processing techniques with embedded hardware, paving the way for more efficient and reliable underwater communication and sensing technologies.**

Keywords—Underwater signal processing, embedded filters, underwater communication,STM32 , underwater acoustics.

I. Introduction

The underwater environment presents significant challenges for signal transmission and reception due to the unique properties of water as a communication medium. Factors such as high signal attenuation, multipath propagation, and ambient noise make underwater signal processing a complex yet essential field of study. Efficient signal processing techniques are critical in applications such as underwater communication systems, sonar technologies, oceanographic research, and marine ecosystem monitoring as shown in fig .1 where the accurate interpretation of acoustic signals is crucial.

Embedded filters serve as a fundamental component in these systems, designed specifically to mitigate underwater signal processing challenges. They play a crucial role in improving signal clarity, reducing noise, and ensuring the accurate transmission of data while operating within the constraints of embedded platforms, such as limited power, computational efficiency, and real-time processing capabilities.

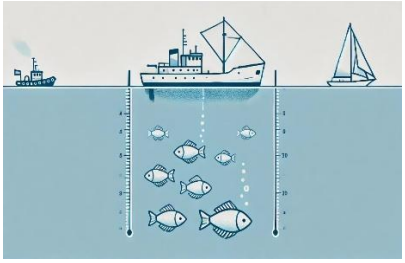

Fig.1 Marine ecosystem monitoring

A. Significance of Embedded Filters in Underwater Signal Processing

Underwater environments introduce several obstacles that hinder effective signal transmission. High-frequency signals experience considerable attenuation, reducing their range, while background noise from marine life, water currents, and human activities introduces significant interference. Additionally, multipath propagation, caused by reflections from the water surface, seabed, and other underwater structures, can distort signals and reduce communication reliability.To address these challenges, embedded filters are designed to enhance the signal-to-noise ratio (SNR), suppress unwanted frequencies, and isolate desired signals. Their compact size and adaptability make them essential for modern underwater systems, where resource efficiency, such as low power consumption and limited processing capacity, is a key consideration.

B. Challenges in Designing Embedded Filters for Underwater Applications

Designing embedded filters for underwater signal processing requires overcoming several key challenges:

1. Noise and Interference – Underwater noise sources, such as marine traffic, biological activities, and thermal noise, vary widely, making signal extraction difficult.

XXX-X-XXXX-XXXX-X/XX/$XX.00 ©20XX IEEE

2. Dynamic Channel Characteristics – Variations in water temperature, salinity, and pressure influence sound speed and introduce distortions, requiring adaptive filtering solutions.
3. Multipath Propagation – Reflections and scattering cause overlapping signal paths, leading to phase shifts, signal delays, and potential distortion.
4. Frequency-Dependent Attenuation – Higher-frequency signals are more susceptible to attenuation, necessitating careful filter design to balance performance and bandwidth.
5. Resource Constraints – Embedded systems operate with limited power, memory, and computational capacity, requiring optimized and energy-efficient filtering techniques.

II. Methodology

A structured approach is followed to investigate embedded filters for underwater applications. The study begins with an analysis of underwater acoustic conditions and the challenges they present for signal processing. Various filter design techniques, including digital and adaptive filtering methods, are explored. A comparative evaluation of different embedded filter architectures is conducted, followed by simulation-based performance assessments. Real-world case studies and practical implementations are also examined to validate the proposed filtering solutions.

A. Scope and Importance

The advancement of efficient embedded filters has significant implications across multiple domains. Enhanced filtering techniques can improve underwater communication, enabling the deployment of advanced marine technologies such as autonomous underwater vehicles (AUVs) and underwater sensor networks. Additionally, they play a crucial role in marine conservation and environmental monitoring by ensuring accurate data collection.
As underwater exploration and communication continue to gain importance, the development of optimized embedded filters remains a key area of innovation. This study aims to provide insights into current technologies, challenges, and future research directions, contributing to the evolution of more efficient and reliable underwater signal processing systems.

III. Literature Survey

Underwater acoustic networks (UANs) present unique challenges due to high propagation delays, limited bandwidth, and signal attenuation. Several studies have focused on signal processing techniques to enhance underwater communication reliability.

Srinivasan and Silva [1] provide a comprehensive discussion on signal processing methodologies tailored for UANs. Their work explores underwater filter design to suppress noise and multipath effects, channel modeling for optimizing signal processing algorithms, and signal detection strategies under ambient noise conditions. Additionally, they discuss data compression, modulation techniques, and the role of signal processing in networking protocols and cross-layer design, supported by case studies and practical applications.

Liu, Xu, and Rappaport [2] analyze the complexities of underwater acoustic communication, emphasizing signal attenuation, multipath propagation, and Doppler effects. Their research highlights the importance of embedded filters in mitigating these issues, providing both theoretical insights and practical applications.

Garay, Meza, and García [3] focus on real-time filtering in embedded systems for underwater monitoring. Their work discusses the integration of real-time signal processing capabilities into embedded systems, improving efficiency and accuracy in underwater data analysis.

Wu and Wang [4] examine digital filter applications in real-time underwater acoustic systems. They highlight the role of digital filtering in enhancing signal clarity and managing noise, demonstrating its effectiveness in underwater acoustic communication and signal detection.

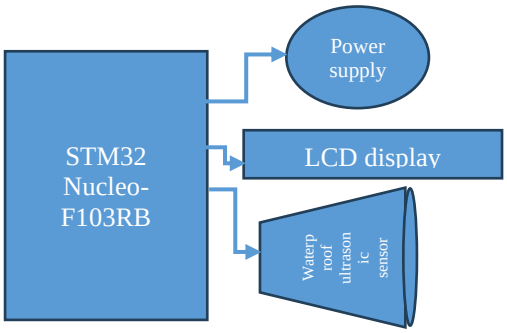

Fig.2 Block diagram

IV. Hardware Board Design

Fig.3 STM32 Nucleo-F103RB

The STM32 Nucleo-F103RB board stands out with its onboard ST-Link/V2-1 debugger and programmer, eliminating the need for external debugging tools while offering drag-and-drop programming and a virtual COM port. It features dual expansion support through Arduino Uno V3 and ST morpho connectors, ensuring compatibility with a wide range of shields and expansion boards. Powered by the STM32F103RB microcontroller, which integrates an ARM Cortex-M3 core running at 72 MHz, 128 KB of Flash, and 20 KB of RAM, the board delivers high performance for real-time applications. Its flexible power options allow operation via USB, external 5V, or 3.3V sources, with jumper settings for power selection. Additionally, it supports multiple IDEs and frameworks, including STM32CubeIDE, Keil, IAR, GCC-based toolchains, and mbed-enabled development, providing versatility in software development. With built-in low-power modes, the board is energy-efficient and well-suited for battery-operated applications. Seamlessly integrated into the STM32 ecosystem, it is compatible with STM32CubeMX and HAL (Hardware Abstraction Layer), simplifying configuration and code generation. These unique characteristics make the STM32 Nucleo-F103RB an ideal

platform for prototyping, learning, and developing embedded systems.

Fig.4 Waterproof ultrasonic sensor

Waterproof ultrasonic sensors are specialized transducers designed for distance measurement and object detection in environments subject to moisture, water exposure, or harsh conditions. These sensors operate by emitting high-frequency ultrasonic waves and determining the distance based on the time delay of the returning echo, utilizing the known speed of sound. Their waterproof construction enhances reliability in applications such as underwater monitoring, liquid level measurement, outdoor obstacle detection, and industrial automation in humid or wet conditions. Typically enclosed in robust materials such as stainless steel or sealed plastic, these sensors comply with high ingress protection (IP67 or above) standards to prevent water penetration and corrosion. Notable examples include the JSN-SR04T, which features a user-friendly interface for seamless microcontroller integration. These sensors are widely employed in robotics, automotive systems, and environmental monitoring applications where non-contact sensing is critical.

Fig.5 LCD Display

Liquid Crystal Display (LCD) technology is widely used in modern electronic devices, including televisions, computer monitors, smartphones, and embedded systems. LCDs function by utilizing liquid crystals, which modulate light in response to an applied electric field, in conjunction with polarized light to produce images. Unlike traditional cathode ray tube (CRT) displays, LCDs offer advantages such as lower power consumption, compact form factors, and improved visual clarity. The internal structure typically consists of multiple layers, including a backlight, polarizers, liquid crystal material, and thin-film transistor (TFT) arrays for active matrix addressing. Various LCD technologies, such as Twisted Nematic (TN), In-Plane Switching (IPS), and Vertical Alignment (VA), are optimized for different performance characteristics, including response time, viewing angles, and color accuracy. With advancements in manufacturing and display technologies, LCDs continue to be a dominant choice in both consumer electronics and industrial applications, offering high efficiency and reliability in diverse environments.

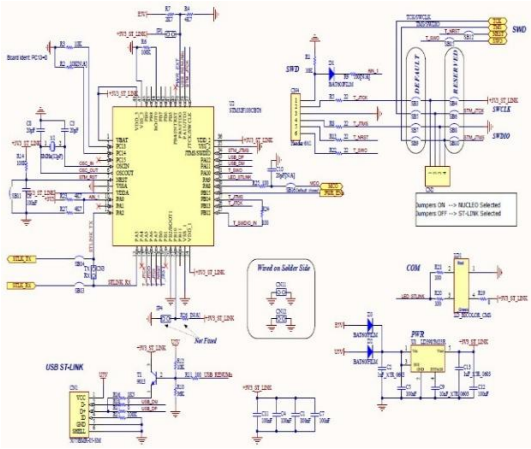

Fig.6 Pin configuration STM32 Nucleo-F103RB

Component	Pin	Connects to (STM32 Nucleo)
HC-SR04	VCC	5V
	GND	GND
	TRIG	D2 (PA10)
	ECHO	D3 (PA9) via voltage divider
I2C LCD	VCC	5V
	GND	GND
	SDA	D14 (PB9 - SDA)
	SCL	D15 (PB8 - SCL)

Fig.7 Connections

The interfacing of an HC-SR04 ultrasonic sensor and an I2C LCD module with an STM32 Nucleo development board enables efficient distance measurement and real-time data display in embedded systems. The HC-SR04 sensor, used for ultrasonic ranging applications, operates by transmitting an ultrasonic pulse and measuring the time delay of the reflected echo. The VCC (5V) and GND pins provide power, while the TRIG pin (connected to D2/PA10) initiates the pulse, and the ECHO pin (connected to D3/PA9 via a voltage divider) returns the received signal. Since the STM32 operates at 3.3V logic, a voltage divider is used to safely interface the 5V echo signal.

The I2C LCD display simplifies output visualization, reducing the number of required microcontroller pins by utilizing the I2C protocol. The LCD module's VCC (5V) and GND provide power, while the data lines SDA (D14/PB9) and SCL (D15/PB8) enable communication with the STM32 Nucleo. This setup ensures efficient data transmission and display updates with minimal wiring complexity. The integration of both components allows for real-time distance monitoring applications in robotics, automation, and smart sensing systems.

V. Experimental Result

Arduino Distance Measuring Transducer Sensor Model:AJ-SR04M Description: AJ-SR04M ultrasonic ranging module is designed by using a waterproof stripline probe integrated with transceiver and receiver and non-contact ultrasonic detection technology. In the range 20cm to 800cm, the product can accurately detect the distance between plane objects, and in the range of 20cm to 250cm, it can accurately measure people.

Module: AJ-SR04M ultrasonic module

Working Voltage: DC 3-5.5V

Working Frequency: 40KHz

Furthest Range: 8m

Recent Range: 20cm

Measuring Angle: 75 degrees

Fig.8 Marine Research

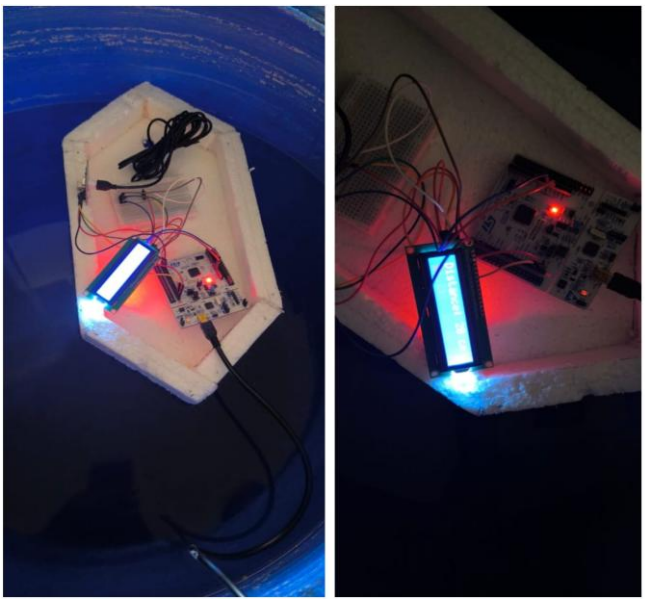

Fig.9 Experimental output

As you observe in fig.9 that while testing our model of ultrasonic sensor for measuring the distance between the ground and the sensor we observe the there was 20 m gap approximate was the same height of the drum as we kept a model in drum to test

VI. Conclusion

Embedded filters play a critical role in addressing the challenges associated with underwater signal processing by enabling noise reduction, signal enhancement, and real-time data analysis. These filters are essential in applications such as sonar systems, underwater communication, environmental monitoring, and autonomous underwater vehicles (AUVs). The implementation of Finite Impulse Response (FIR), Infinite Impulse Response (IIR), and adaptive filtering techniques helps mitigate issues such as multipath propagation, signal attenuation, and interference in aquatic environments.

With advancements in embedded systems, the integration of machine learning-based and deep learning-driven filtering techniques is poised to enhance performance and adaptability in underwater applications. The increasing demand for low-power, high-performance solutions is driving innovation in energy-efficient embedded filters, which are essential for long-duration operations in remote underwater environments.

Looking forward, embedded filtering technologies will continue to evolve, expanding their applications in real-time environmental monitoring, autonomous systems, and advanced underwater communication networks. Their ability to process data locally and efficiently is pivotal in enabling intelligent, adaptive underwater systems, further advancing marine exploration, research, and communication capabilities.

VII. References

[1] A. C. Singer, J. K. Nelson and S. S. Kozat, "Signal processing for underwater acoustic communications," in IEEE Communications Magazine, vol. 47, no. 1, pp. 90-96, January 2009, doi: 10.1109/MCOM.2009.4752683.

[2] Srividhya K. and Ramya M.M, "Performance analysis of pre-processing filters for underwater images," *2015 International Conference on Robotics, Automation, Control and Embedded Systems (RACE)*, Chennai, India, 2015, pp. 1-7, doi: 10.1109/RACE.2015.7097234.

[3] J. Yan, X. Tian, X. Luo and X. Guan, "Design of an Embedded Communication System for Underwater Asynchronous Localization," in *IEEE Embedded Systems Letters*, vol. 11, no. 3, pp. 97-100, Sept. 2019, doi: 10.1109/LES.2019.2904528.

[4] Y. Su, L. Dong, Z. Zhou, X. Liu and X. Wei, "A General Embedded Underwater Acoustic Communication System Based on Advance STM32," in *IEEE Embedded Systems Letters*, vol. 13, no. 3, pp. 90-93, Sept. 2021, doi: 10.1109/LES.2020.3006838.

[5] M. Johnson, L. Freitag and M. Stojanovic, "Improved Doppler tracking and correction for underwater acoustic communications," *1997 IEEE International Conference on Acoustics, Speech, and Signal Processing*, Munich, Germany, 1997, pp. 575-578 vol.1, doi: 10.1109/ICASSP.1997.599703.

[6] S. Haykin and B. Van Veen, "Signals and Systems," Wiley, 2007.

[7] K. G. B. Reddy and B. S. Raj**,** "Signal Processing Techniques for Underwater Acoustics," Wiley, 2014.

[8] P. L. L. R. Srinivasan and A. M. P. Silva, "Signal Processing for Underwater Acoustic Networks," Springer, 2018.

[9] L. F. L. Wu and Z. D. Wang**,** "Application of Digital Filters in Underwater Acoustics," Journal of Acoustical Society of America, 2016.

[10] M. J. L. Liao, "Embedded Systems Design with FPGAs for Underwater Acoustic Signal Processing," International Journal of Embedded Systems, 2019.